FIREPLACE INSERT BEF FLAT V8 CL
IN ACCORDANCE WITH EN 13 229

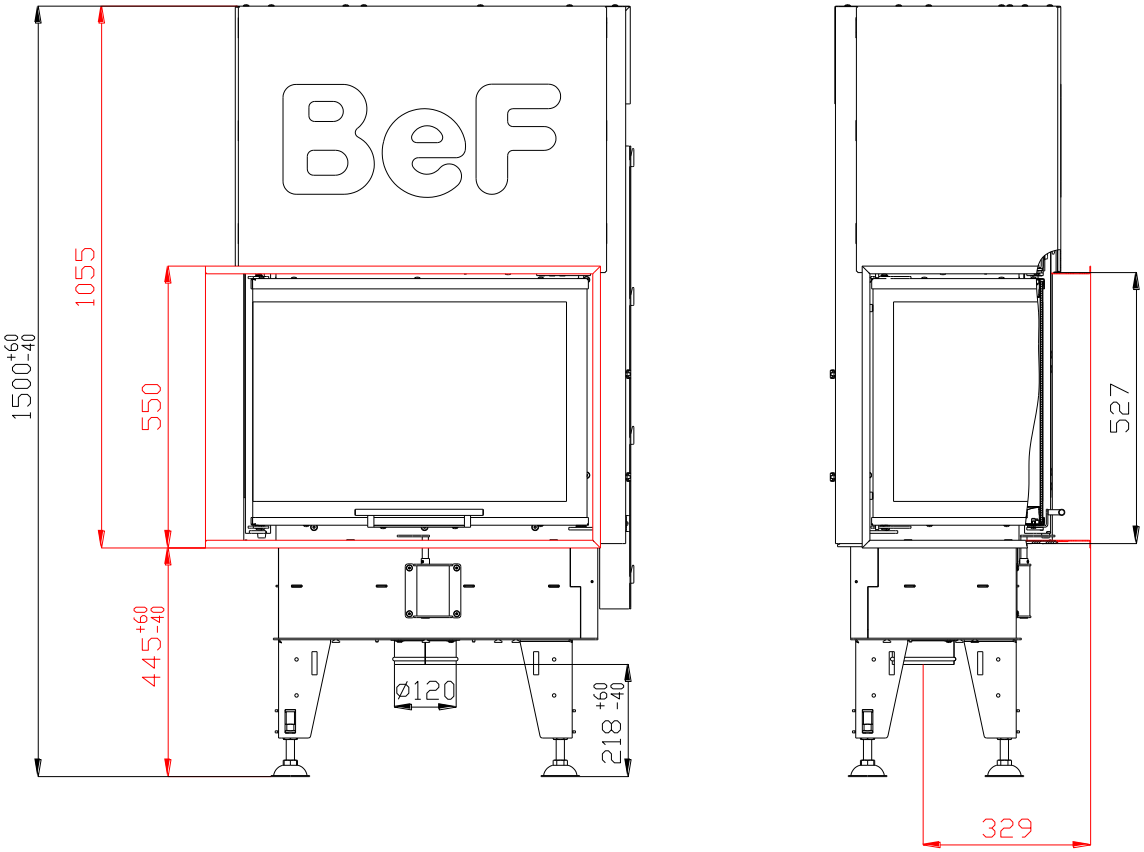

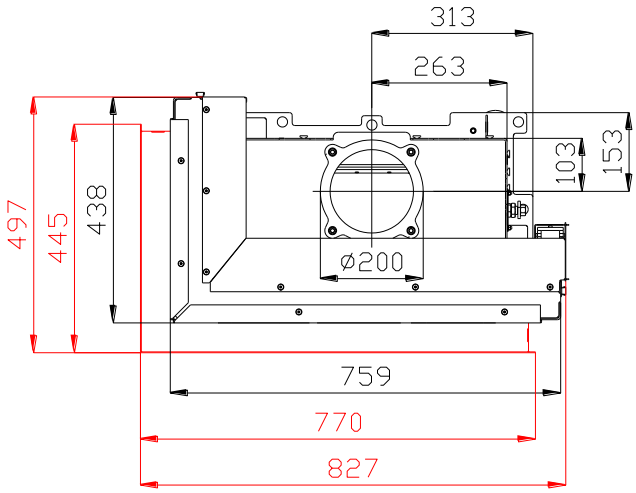

FIREPLACE INSERT BEF FLAT V8 CL IN ACCORDANCE WITH EN 13 229

Technical data:

Nominal heat output	kW	8
Efficiency	%	85
Volume flow of combustion products	g/s	6
Flue-gas temperature	^{o}C	212
Min. feed pressure at nominal heat output	Pa	12
Fuel		wood (beech logs)
Fuel consumption per hour	kg/h	2,54
CO emission in burnt gas (in relation to 13% O2)	%	0,0932
Dust in flue-gas (in relation to 13% O2)	mg/Nm^3	16
Smoke flue diameter	mm	180
Weight	kg	186

Set of carcon firebox:

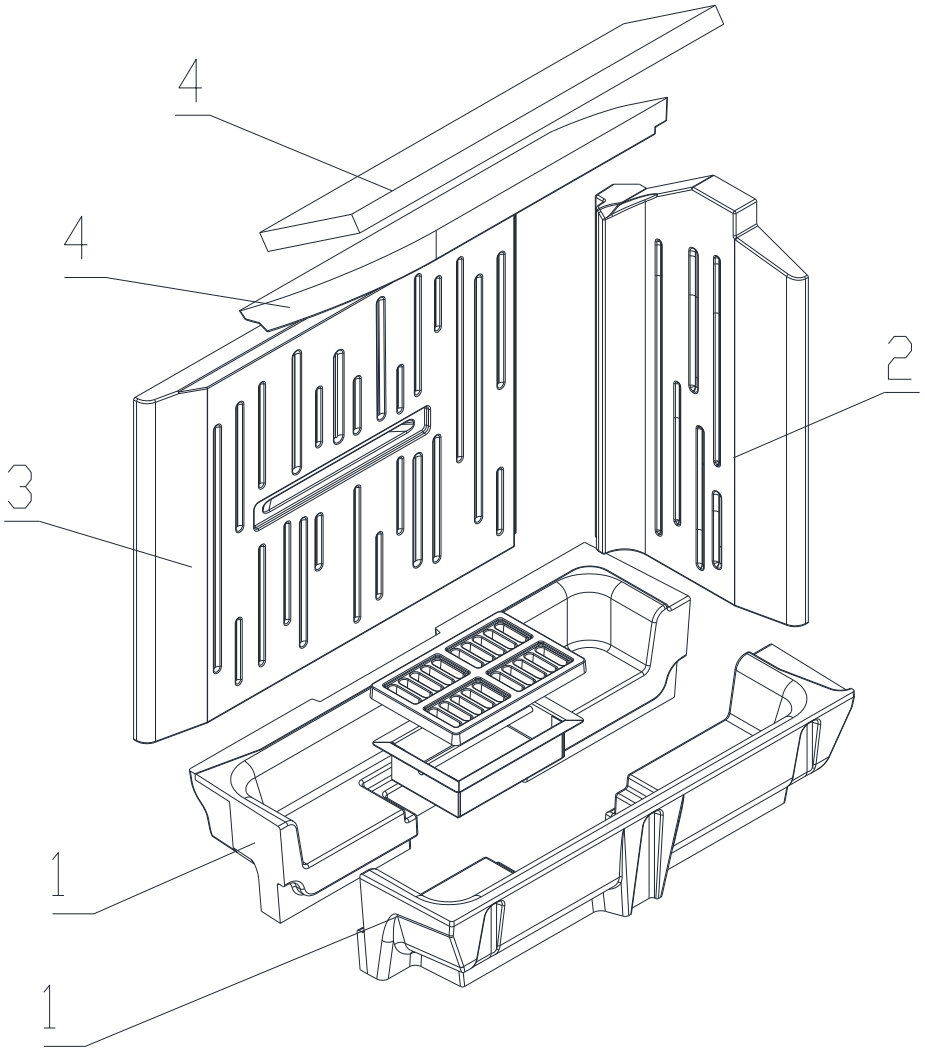

1. **BOTTOM**
2. **SIDE PIECE**
3. **BACK**
4. **DEFLECTOR**

For details see Installation and Service Instructions.